SCHWING AMERICA INC.	Schieberpaket GATE VALVE KIT - 180 Paquet de tiroir Paquete de correderas	Fig. 3.3 Spare Parts List 715420102070-3 Sheet No. 1 of 2

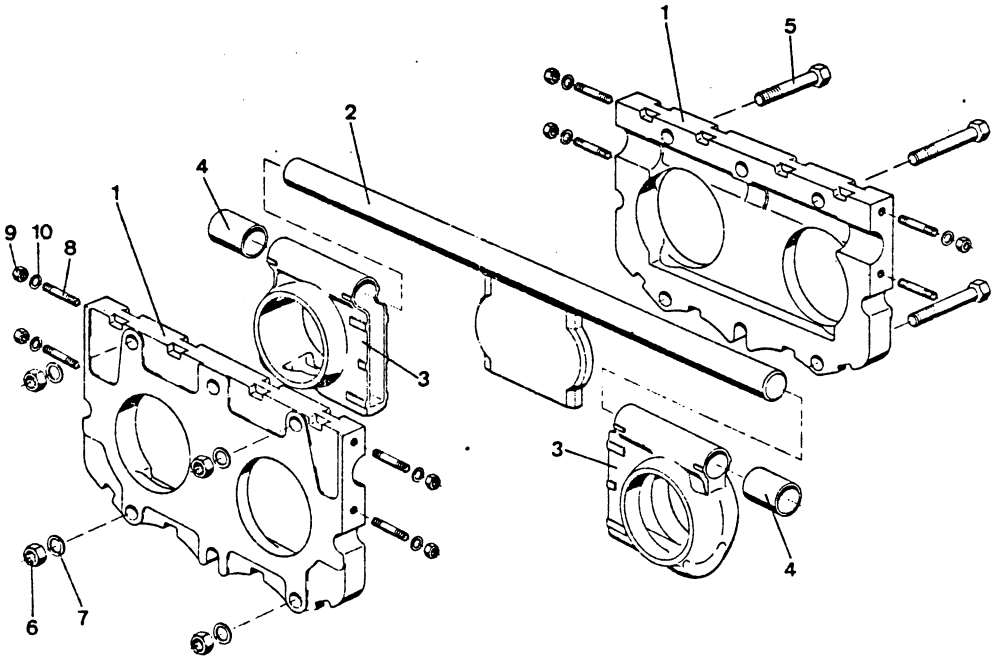

SCHWING AMERICA INC.

Date 10/26/79

Spare Parts List for Fig. 3.3

GATE VALVE KIT
180/55/25

No. 715420102070-3
Identification No.: _____
Sheet 2 of 2 Sheets

Pos.	Quan.	Description	ID - No.	Order No.
1	1	Control housing 180/55/25		7154201010708
2	1	Flat gate valve 180/55/25	2348	7024201020276
3	2	Cup body 180/55/25	14011	7154201030709
4	2	Guide sleeve	13830	7154201040704
5	4	Screw M 24x120 DIN 931-8.8	1900	9970081127343
6	4	Nut M 24 DIN 934-8	1378	9970620017344
7	4	Disc B 25 DIN 125 St	13305	9972010076010
8	8	Screw M 16x60 DIN 939-10.9	1997	9971490817350
9	8	Nut M 16 DIN 6915-10	1209	9970640013355
10	8	Disc 17 DIN 6916	1512	9972080054160